PASS & SEYMOUR®

Plug Load UL Fed Spec Grade USB Duplex Receptacle

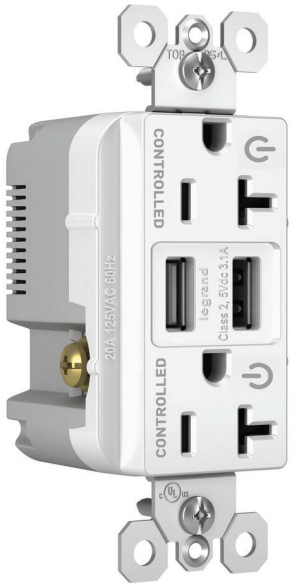

Charge ahead with the UL Fed Spec Grade USB duplex receptacle.

TR5362USBCDW, TR5362USBCDGN, TR5362USBCDBK, TR5362USBCDBL, TR5362USBCDBL100

Pass & Seymour® Plug Load Fed Spec Tamper-Resistant Duplex Receptacles with USB Charging capabilities and permanent markings are designed with strength, durability, and code compliance in mind. They were designed for the commercial market, and are capable of withstanding heavy use due to their UL Federal Specification certification. This product features 3.1A USB charging capability, auto-ground clips, zinc-plated ground terminal screw, as well as triple-wipe brass contacts for lasting retention. The screw-pressure-plate back wiring makes installation fast and easy.

Features & Benefits

Overall 3.1A USB charging capability – combination AC duplex receptacles include two 5-volt DC USB ports that work with USB 2.0 and 3.0 compatible devices

AC receptacles available in 15 and 20A, 125V

AC receptacles are tamper-resistant as standard – patented shutter system prevents improper insertion of foreign objects

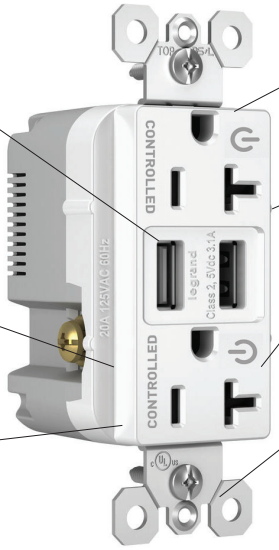

TR5362USBCDW

Multiple color options available

Back and side wire terminals accommodate #14 AWG - #10 AWG stranded and solid copper wire

Now available in permanently marked controlled devices compliant with the National Electrical Code®, CA Title 24, and ASHRAE Energy Effciency Standard 90.1

Stainless steel auto-ground clips assure positive ground

Code compliant Plug Load Controlled receptacle with permanent markings that use abrasion resistant ink. Clear indication to identify a controlled wiring device from others devices

3rd Party Compliance

cULus Listed, UL Fed Spec Listed
Complies with test requirements UL 498, UL 1310, Fed Spec WC596,
CSA C22.2 No. 42, CSA C22.2 No. 223
CA Title 24, and ASHRAE Energy Effciency Standard 90.1.
2021 International Energy Conversation Code (IECC),2023 NEC, Part 6: Building Energy Efficiency Standards

Ordering Information

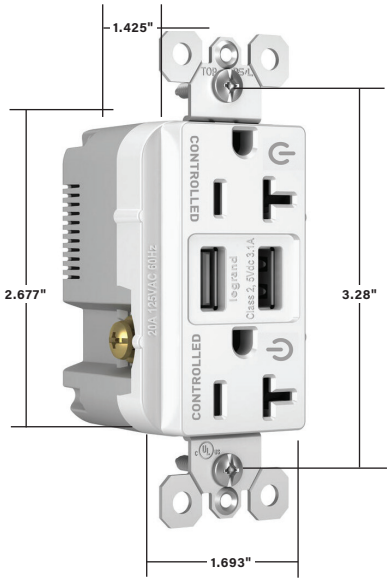

Performance	
Electrical	
Dielectric Withstand Voltage	Withstands 1500V minimum
Maximum Working Voltage	125V
Current Interrupting	Certified for current interrupting at full-rated current (receptacle only)
Mechanical	
Terminal Identification	Terminal Identification in accordance with UL498 (Brass, White, Green)
Terminal Accommodation	Back and side wire terminals accommodate #14 AWG - #10 AWG stranded and solid copper wire
Product Identification	Ratings are a permanent part of device
Environmental	
Flammability	UL94 V2 (for device cover) 5V (for device body and frame)
Operating Temperature	Maximum continuous +60°C, minimum -40°C without impact

Materials	
Face	Polycarbonate
Body	Nylon
Contacts	CDA 260 Brass
Mounting Strap	.046" Zinc-Plated Brass
Terminal Screws	Tri-Drive Zinc-Plated Steel with Either Clear or Black Chromate For Color Identification
Ground Screw	Tri-Drive Steel with Green Chromate
Mounting Screws	Tri-Drive Steel
Auto-Ground Clip	Stainless Steel

Warranty
1 Year

Ordering Information

Dual Controlled Duplex-Tamper-Resistant Receptacle with USB Charger

Catalog Number	Rating A	V	Color	NEMA Configuration No.
TR5362USBCDW	20A	125V	White	5-20R
TR5362USBCDGN	20A	125V	Green	5-20R
TR5362USBCDBK	20A	125V	Black	5-20R
TR5362USBCDBL	20A	125V	Blue	5-20R
TR5362USBCDBL100*	20A	125V	Blue	5-20R

* Denotes bulk pack of 100

NEMA 5-15R

NEMA 5-20R

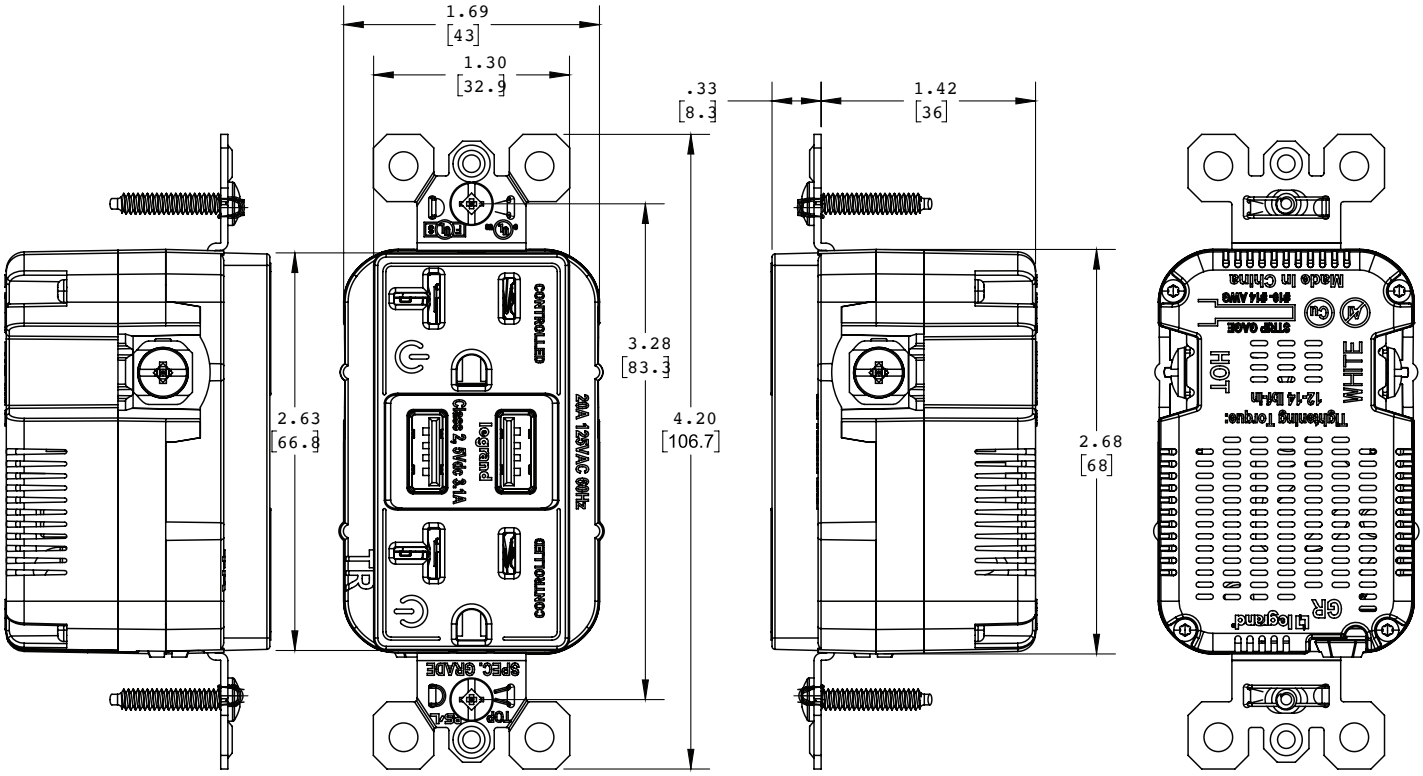

Plug Load Controllable Receptacles Wiring Diagram

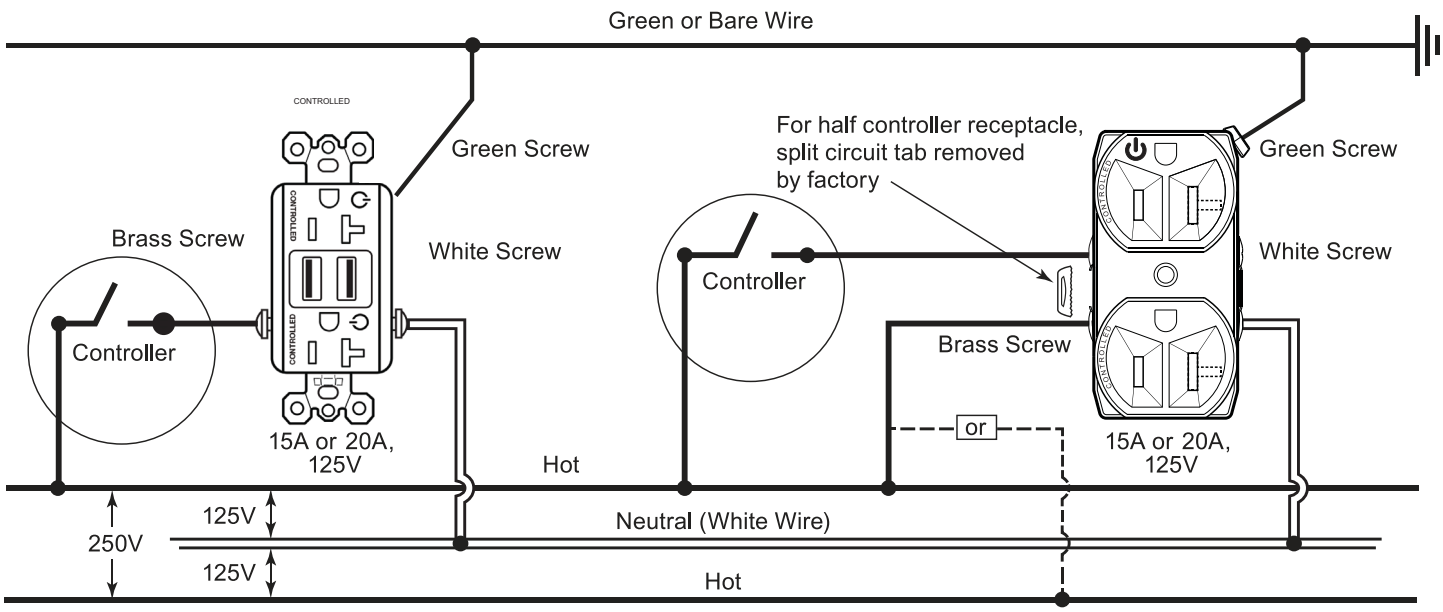

Note: Hot conductors may be any color OTHER than white, gray or green.

Vertical Markets

- **Healthcare**
- **Hospitality/Lodging**
- **Education**
- **Office**
- **Airports**
- **Institutional**
- **Retail**
- **Multiple Dwelling**

Also available

- **Hospital Grade Devices**
- **SPD & Isolated Ground Devices**
- **Ground Continuity Monitoring (GCM)**
- **Straight Blade Plugs & Connectors**
- **Turnlok® Locking Devices**
- **Weatherproof Boxes & Covers**
- **IEC 309 Industrial Products**
- **Flexcor® Wire Mesh Grips**
- **Bulk Solutions**

The paper used to print this document is an environmentally responsible paper with 10% post consumer waste, with FSC and SFI Chain of Custody certifications, Lacey Act complaint. 100% of the electricity used to manufacture Flo sheets is generated with Green-e certified renewable energy.

All brand and product names referenced in this document are registered trademarks or trademarks of their respective holders.

Legrand, North America
60 Woodlawn Street
West Hartford, CT 06110
1.877.BY.LEGRAND (295.3472)
www.legrand.us

905.738.9195
www.legrand.ca

FOLLOW US

 ©2023 Legrand All Rights Reserved

PASS & SEYMOUR®

Plug Load UL Fed Spec Grade USB Duplex Receptacle

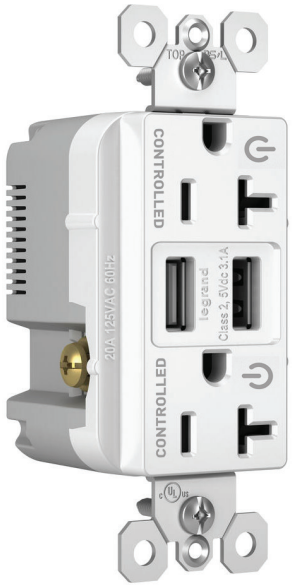

Charge ahead with the UL Fed Spec Grade USB duplex receptacle.

TR5362USBCDW, TR5362USBCDGN, TR5362USBCDBK, TR5362USBCDBL, TR5362USBCDBL100

Pass & Seymour® Plug Load Fed Spec Tamper-Resistant Duplex Receptacles with USB Charging capabilities and permanent markings are designed with strength, durability, and code compliance in mind. They were designed for the commercial market, and are capable of withstanding heavy use due to their UL Federal Specification certification. This product features 3.1A USB charging capability, auto-ground clips, zinc-plated ground terminal screw, as well as triple-wipe brass contacts for lasting retention. The screw-pressure-plate back wiring makes installation fast and easy.

Features & Benefits

Overall 3.1A USB charging capability – combination AC duplex receptacles include two 5-volt DC USB ports that work with USB 2.0 and 3.0 compatible devices

AC receptacles available in 15 and 20A, 125V

AC receptacles are tamper-resistant as standard – patented shutter system prevents improper insertion of foreign objects

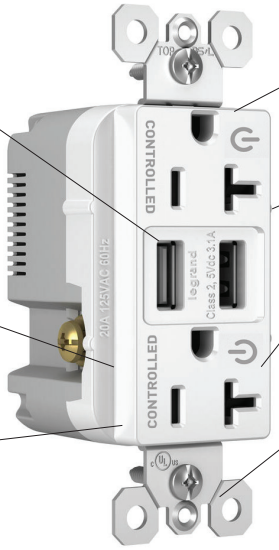

TR5362USBCDW

Multiple color options available

Back and side wire terminals accommodate #14 AWG - #10 AWG stranded and solid copper wire

Now available in permanently marked controlled devices compliant with the National Electrical Code®, CA Title 24, and ASHRAE Energy Effciency Standard 90.1

Stainless steel auto-ground clips assure positive ground

Code compliant Plug Load Controlled receptacle with permanent markings that use abrasion resistant ink. Clear indication to identify a controlled wiring device from others devices

3rd Party Compliance

cULus Listed, UL Fed Spec Listed
Complies with test requirements UL 498, UL 1310, Fed Spec WC596,
CSA C22.2 No. 42, CSA C22.2 No. 223
CA Title 24, and ASHRAE Energy Effciency Standard 90.1.
2021 International Energy Conversation Code (IECC),2023 NEC, Part 6: Building Energy Efficiency Standards

Ordering Information

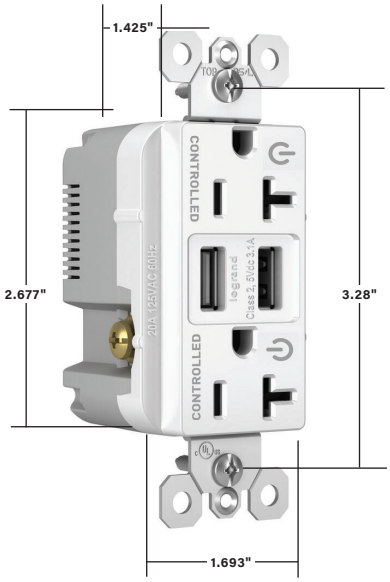

Performance	
Electrical	
Dielectric Withstand Voltage	Withstands 1500V minimum
Maximum Working Voltage	125V
Current Interrupting	Certified for current interrupting at full-rated current (receptacle only)
Mechanical	
Terminal Identification	Terminal Identification in accordance with UL498 (Brass, White, Green)
Terminal Accommodation	Back and side wire terminals accommodate #14 AWG - #10 AWG stranded and solid copper wire
Product Identification	Ratings are a permanent part of device
Environmental	
Flammability	UL94 V2 (for device cover) 5V (for device body and frame)
Operating Temperature	Maximum continuous +60°C, minimum -40°C without impact

Materials	
Face	Polycarbonate
Body	Nylon
Contacts	CDA 260 Brass
Mounting Strap	.046" Zinc-Plated Brass
Terminal Screws	Tri-Drive Zinc-Plated Steel with Either Clear or Black Chromate For Color Identification
Ground Screw	Tri-Drive Steel with Green Chromate
Mounting Screws	Tri-Drive Steel
Auto-Ground Clip	Stainless Steel

Warranty
1 Year

Ordering Information

Dual Controlled Duplex-Tamper-Resistant Receptacle with USB Charger

Catalog Number	Rating A	V	Color	NEMA Configuration No.
TR5362USBCDW	20A	125V	White	5-20R
TR5362USBCDGN	20A	125V	Green	5-20R
TR5362USBCDBK	20A	125V	Black	5-20R
TR5362USBCDBL	20A	125V	Blue	5-20R
TR5362USBCDBL100*	20A	125V	Blue	5-20R

* Denotes bulk pack of 100

NEMA 5-15R

NEMA 5-20R

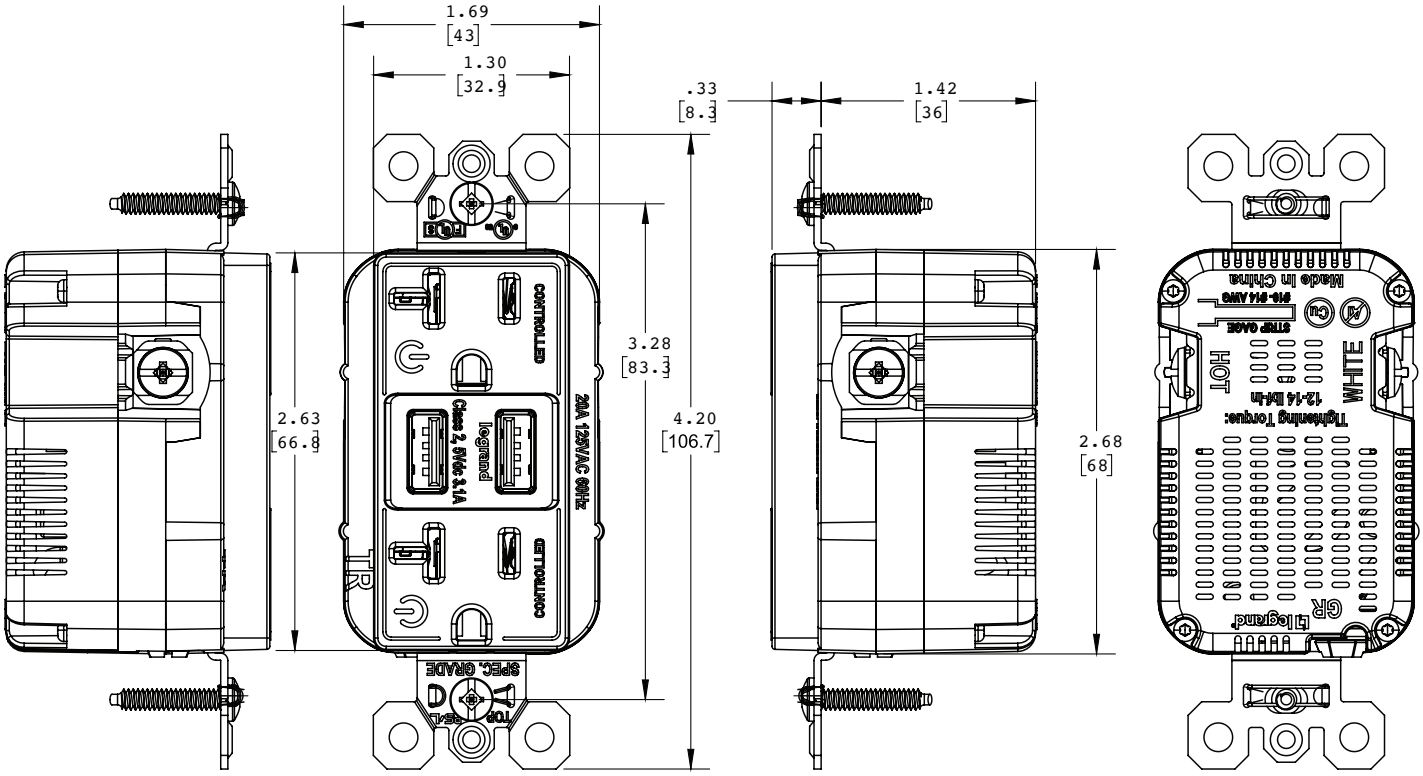

Plug Load Controllable Receptacles Wiring Diagram

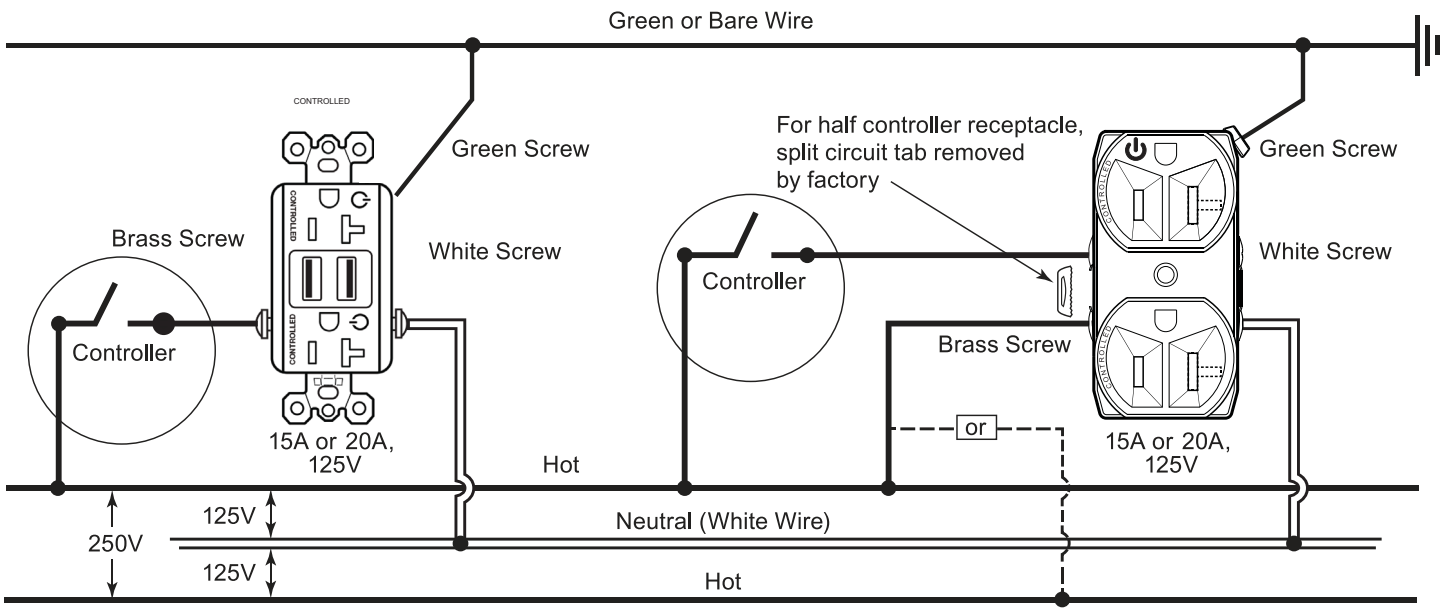

Note: Hot conductors may be any color OTHER than white, gray or green.

Vertical Markets

- **Healthcare**
- **Hospitality/Lodging**
- **Education**
- **Office**
- **Airports**
- **Institutional**
- **Retail**
- **Multiple Dwelling**

Also available

- **Hospital Grade Devices**
- **SPD & Isolated Ground Devices**
- **Ground Continuity Monitoring (GCM)**
- **Straight Blade Plugs & Connectors**
- **Turnlok® Locking Devices**
- **Weatherproof Boxes & Covers**
- **IEC 309 Industrial Products**
- **Flexcor® Wire Mesh Grips**
- **Bulk Solutions**

The paper used to print this document is an environmentally responsible paper with 10% post consumer waste, with FSC and SFI Chain of Custody certifications, Lacey Act complaint. 100% of the electricity used to manufacture Flo sheets is generated with Green-e certified renewable energy.

All brand and product names referenced in this document are registered trademarks or trademarks of their respective holders.

Legrand, North America
60 Woodlawn Street
West Hartford, CT 06110
1.877.BY.LEGRAND (295.3472)
www.legrand.us

905.738.9195
www.legrand.ca

FOLLOW US

 ©2023 Legrand All Rights Reserved