ELLIOTT ELECTRIC SUPPLY
We Deliver...Lower Cost, Quality Products, & Personal Service
2310 N. Stallings Dr.
Nacogdoches, TX 75964-0
Phone: 9365697941
Fax: 9365604685



STASWH SUNNATA ACCESSORY SWITCH

LUTRON

Catalog Number	STASWH
Manufacturer	LUTRON
Description	Accessory Switch, ST-AS-WH, White
Weight per unit	0.2900 (lbs/each)
Product Category	Wiring Devices

Features

Voltage Rating	120
Amperage Rating	6

Material, Color, and Finish

Color	White
Finish	Gloss

Descriptions

Description	SUNNATA ACCESSORY SWITCH
Features	The Lutron Accessory Switch expands compatible Lutron dimmers into 3-way and multi-location applications, giving users convenient control from more locations throughout the space. It is designed for use with select compatible Lutron dimmers and is not for standalone use. Within a multi-location setup, the Lutron Accessory Switch provides convenient on/off control, while the paired primary dimmer manages dimming and other advanced lighting features. Add up to nine (9) accessory switches to control lights fr
Long Description	Accessory Switch, ST-AS-WH, White
Product Type	Sunnata 6A Accessory Switch, White
Extra Long Description	LUT ST-AS-WH Sunnata 6A Accessory S

Manufacturer Information

Brand	LUTRON ELECTRONICS
GTIN	00784276811002
Manufacturers Part Number	ST-AS-WH
UPC	784276

Taxonomies, Classifications, and Categories

Category Description	Residential Switches

Packaging

Carton	1
Package	24
Weight Per Each	0.2900 (lbs/each)

2310 N. Stallings Dr.
Nacogdoches, TX 75964-0
Phone: 9365697941
Fax: 9365604685

Uses, Certifications, and Standards

Application	For use with Sunnata LED+ Dimmers STCL-153M
Operating Temperature	32 to 104

3691167c 1 05.09.24

Sunnata Standalone Controls

Touch dimmer (and coordinating products) with next generation design and technology.

Features

- Touch technology with intuitive on/off paddle switch that fits in a standard designer wallplate opening.
- Advanced dimming technology designed for compatibility with a broad range of high efficacy bulbs.
- Dimmers and switches contain MyLevel Personalization Advanced Feature Mode to customize the control.
- Low-end and high-end adjustments to accommodate a wide range of bulbs.
- White light bar provides locator light to easily find the switch in the dark. Brightness of locator light is adjustable through MyLevel Personalization. Locator light can also be turned off.
- Can be used in single-pole, multi-location[1], or 3-way mechanical switch[2] applications (fan control is single pole only).
- Coordinating Claro and Stainless Steel wallplates available separately.
- Fan control for use with AC fan only[3]
- 100% factory tested.
- NEMA SSL-7A Compliant.
- UL® Listed.

NOTE: Main control will only work with companion or accessory shown to the right. Companions and accessories are not interchangeable.



LED+ Dimmer
STCL-153M



Accessory Switch
ST-AS (works with STCL-153M only)



PRO Dimmer
ST-PRO-N



PRO Companion Dimmer
ST-RD (works with ST-PRO-N only)



Switch
ST-6ANS



Companion Switch
ST-RS (works with ST-6ANS only)



Fan Control
ST–FSQ-N

1 Sunnata standalone controls can be controlled from multiple locations when paired with the appropriate accessory or companion control pictured to the right of the main control above.

2 LED+ models only. An additional wiring step is required for 3-way mechanical switch applications. Not for use in 4-way mechanical switch applications.

3 Use to control one paddle-type ceiling fan. Not for use with DC motor fans, fans with remote controls or Wi-Fi only fans. Not for use with bathroom or kitchen exhaust-type fans or to control lighting loads on a fan.

Job Name:	Model Numbers:
Job Number:	

Model Numbers

LED+ Dimmer

LED / CFL / Incandescent / Halogen (120 V~)

STCL-153M-XX[1,2,3] (replaces STCL-153P-XX)	150 W (LED / CFL) or 600 W Incandescent / Halogen
ST-AS-XX[1] (works with STCL-153M only)	Accessory Switch (120 V~, max 9 per LED+ dimmer)

PRO LED+ Dimmer

LED / CFL / Incandescent / Halogen / MLV / ELV / Dimmable Fluorescent Ballasts / Hi-lume LTE Drivers (120 V~)

ST-PRO-N-XX[1]	250 W (LED / CFL)* or 500 W Incandescent / Halogen / ELV or 400 VA MLV phase selectable, neutral dimmer
ST-RD-XX[1] (works with ST-PRO-N only)	PRO Companion dimmer (120 V~, max of 4 per PRO dimmer)

Switch

Lighting and Motor Loads (120 V~)

ST-6ANS-XX[1]	6 A Light, 1/10 HP 3 A motor neutral wire electronic switch
ST-RS-XX[1] (works with ST-6ANS only)	Companion switch (120 V~, max of 4 per Sunnata switch)

Fan Control

Paddle-type Ceiling Fan (120 V~)

ST-FSQ-N-XX	1.5 A max. one (1) paddle-type AC ceiling fan only

Notes:

[1] XX" represents the color code.

[2] For clamshell packaging add "H" after "153M".

[3] For clamshell packaged product for Canada add "-C" after the color code.

Job Name:	Model Numbers:
Job Number:	

Specifications

Regulatory Approvals

- UL® Listed to U.S. and Canadian safety requirements (UL 1472/CSA C22.2 184.1)
- NOM
- NEMA SSL-7A-2015 forward-phase compliant
- FCC, IC (not applicable to ST-AS)

Fan Speed Controls Standards

- UL® 1917
- CSA C22.2 No. 156

Environment

- For indoor use only
- Operating temperatures 32 °F (0 °C) to 104 °F (40 °C)

Performance

- Power-failure memory
- Touch the dimmer to go to any light level (-PRO-N, -RD, and -153M only)
- Electrostatic discharge tested
- Precise color matching
- Includes a Front Accessible Service Switch (FASS) for safe bulb replacement (not applicable to ST-AS)

Application Requirements

- ***When using LEDs or CFLs, only bulbs marked or rated as Dimmable can be used.***
- To access our mobile friendly online tool of DIMMABLE LEDs visit www.lutron.com/LEDfinder

Warranty

- 1 Year Limited Warranty.
  For additional Warranty information, please visit www.lutron.com/TechnicalDocumentLibrary/369-119_Wallbox_Warranty.pdf

Job Name:	Model Numbers:
Job Number:	

LED+ and Accessory Switch Dimensions

Wired Product

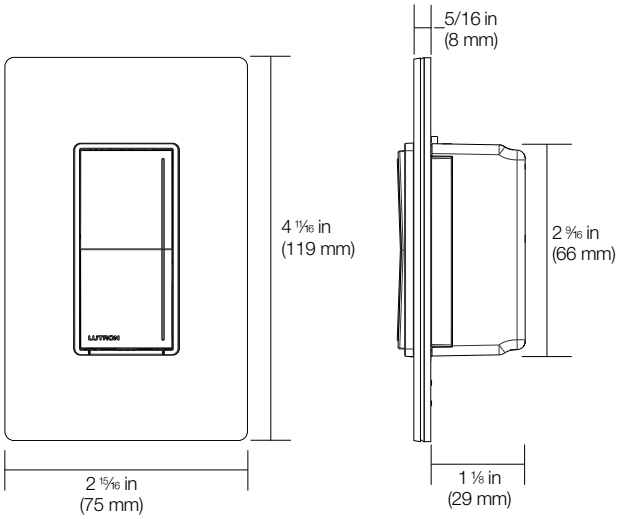

Note: Requires a U.S. wallbox 2 ¼ in (57 mm) deep minimum.

PRO and Companion Dimensions

Screw Terminal Product

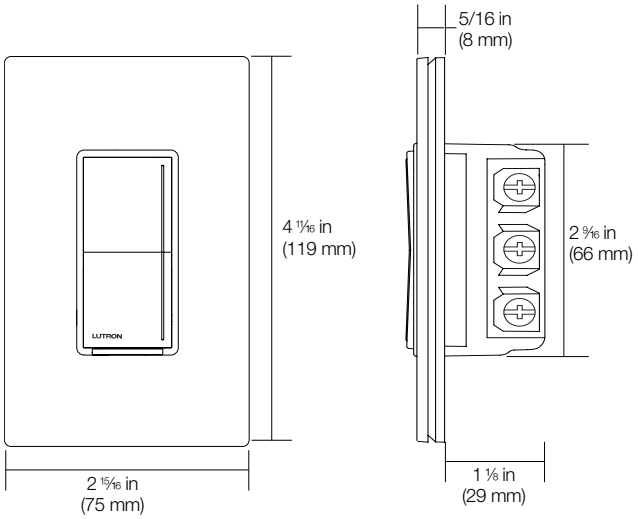

Fan Control Dimensions

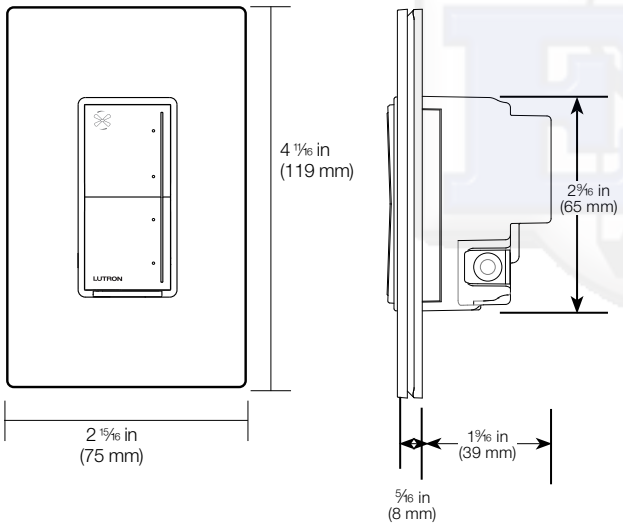

Note: ST-FSQ-N requires a U.S. wallbox 2 ½ in (64 mm) deep minimum.

Job Name:	Model Numbers:
Job Number:	

3691167c 5 05.09.24

Mounting and Parts Identification

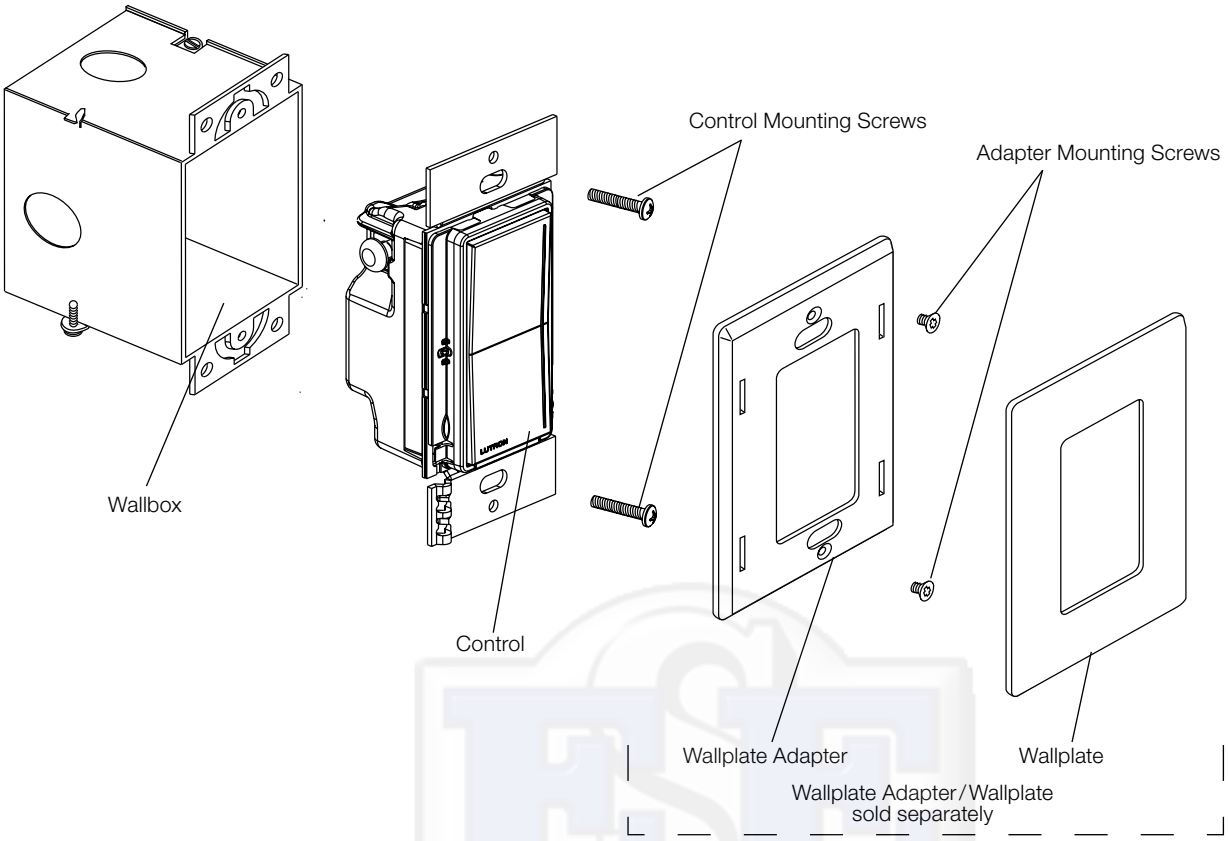

Job Name:	Model Numbers:
Job Number:	

Model Compatibility

Model Number	Description	Neutral Required	Compatible with Mechanical Switch?	Companion	Number of Locations	Identical Companion (appearance and functionality)	Load Types Controlled (other than LED/CFL/INC/HAL)
STCL-153M	LED+ Dimmer	No	Yes[1]	ST-AS	10	No[2]	N/A
ST-PRO-N	PRO Phase Selectable Dimmer	Yes	No	ST-RD	5	Yes	MLV/ELV/ Dimmable Fluorescent Ballasts/ Hi-lume LTE drivers
ST-6ANS	Switch	Yes	No	ST-RS	5	Yes	Lighting and Motor loads

[1] LED+ models only. An additional wiring step is required for 3-way mechanical switch applications. Not for use in 4-way mechanical switch applications.
[2] ST-AS provides matching aesthetic and switching from the remote location.

Job Name:	Model Numbers:
Job Number:	

Load Type and Capacity

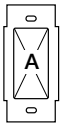

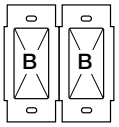

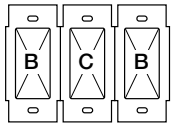

Load Type	Minimum Load	A Not Ganged	B End of Gang	C Middle of Gang	Neutral Connection	Required Phase Mode[2]
STCL-153M[3]						
LED	1 LED	150 W	150 W	150 W	No	—
CFL	1 CFL bulb	150 W	150 W	150 W	No	—
Incandescent/Halogen	25 W	600 W	500 W	400 W	No	—
ST-PRO-N[3,4]						
LED	1 LED	250 W	200 W	150 W	Required[1]	Either
MLV Transformer with LEDs	See Application Note #559 (P/N 048559) at www.lutron.com No Derating Required					Forward
ELV Transformer with LEDs						Reverse
MLV Transformer with Halogen	10 W	400 VA (300 W)	No Derating Required			Forward
ELV Transformer with Halogen	10 W	500 W	400 W	300 W		Reverse
Incandescent/Halogen	10 W	500 W	400 W	300 W		Either
Dimmable Fluorescent Ballast	1 ballast	3.3 A (400 VA)	No Derating Required			Forward
Hi-lume 1% 2-wire (LTE) LED Driver	1 driver	3.3 A (400 W) 20 drivers max.	No Derating Required			Forward
PHPM-PA/3F and GRX-TVI[4]	1 interface	3 interfaces	No Derating Required			Forward
ST-6ANS[4,5,6]						
LED Lighting	1 LED	6 A	4 A	4 A	Required[1]	—
Other Lighting Loads	10 W/VA	6 A	4 A	4 A		—
Motor	0.08 A	1/10 HP 3 A	1/10 HP 3 A	1/10 HP 3 A		—
ST-FSQ-N[7]						
Paddle-Type Ceiling Fan	0.08 A	1.5 A	1.5 A	1.5 A	Required[1]	—

[1] **Neutral is required for all load types.**
[2] Phase Mode default setting is Reverse-Phase. (-PRO-N only)
[3] Do not install dimmers to control receptacles or motor operated appliances with ratings above the motor ratings listed on this table.
[4] Power boosters/Load Interfaces: -ST-PRO-N and -ST-6ANS can be used to control power boosters/load interfaces. For a list of compatiible power boosters/load interfaces see ***Compatible Power Boosters and Load Interfaces***, page 9.
[5] Do not install switches to control receptacles.
[6] Switch Load Type:
-6ANS: Designed for use with permanently installed 120 V~ incandescent, MLV, ELV, tungsten halogen, fluorescent, LED, CFL, or motor loads.
[7] Do not use to control DC motor fans, fans with remote controls, Wi-Fi only fans, lighting loads on a fan, bathroom or kitchen exhaust-type fans.

Note: For dimming MLV fixtures, the maximum lamp wattage is typically 70%-85% of the transformer's VA rating. For actual transformer efficiency, contact the manufacturer. The total VA rating of the transformer(s) shall not exceed the VA rating of the dimmer.

Job Name:	Model Numbers:
Job Number:	

Mixing Lamp Types

Mixing lamp types (using a combination of LED/CFL, Incandescent/Halogen bulbs) and ganging with other dimmers or electronic switches may reduce maximum wattage as shown in the chart below.

Example: If you have two dimmers ganged together and you have two 13 W bulbs installed (total LED Wattage = 26 W) on one dimmer, you may add up to 300 W of incandescent or halogen lighting to that one dimmer. Repeat the exercise for the other dimmer with which it is ganged.

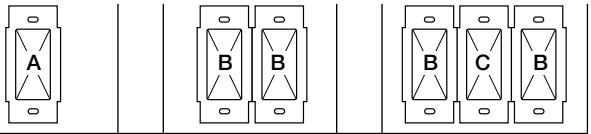

Total LED/CFL Wattage		Total Incandescent/Halogen Wattage						Neutral Connection
		A Not Ganged		B End of Gang		C Middle of Gang		
STCL-153M[1]								
0 W	+	600 W	Or	500 W	Or	400 W		No
1 W-25 W	+	500 W	Or	400 W	Or	300 W		
26 W-50 W	+	400 W	Or	300 W	Or	200 W		
51 W-75 W	+	300 W	Or	200 W	Or	100 W		
76 W-100 W	+	200 W	Or	100 W	Or	50 W		
101 W-125 W	+	100 W	Or	50 W	Or	0 W		
126 W-150 W	+	0 W	Or	0 W	Or	0 W		
ST-PRO-N[1]								
0 W	+	500 W	Or	400 W	Or	300 W		Required
1 W-50 W	+	400 W	Or	300 W	Or	200 W		
51 W-100 W	+	300 W	Or	200 W	Or	100 W		
101 W-150 W	+	200 W	Or	100 W	Or	0 W		
151 W-200 W	+	100 W	Or	0 W	Or	0 W		
201 W-250 W	+	0 W	Or	0 W	Or	0 W		

[1] Do not install dimmers to control receptacles or motor-operated appliances.

Job Name:	Model Numbers:
Job Number:	

Compatible Power Boosters and Load Interfaces

Some local controls can be used to control power boosters or load interfaces. Up to three power boosters or load interfaces can be used with one control. See table below for a list of controls and compatible power boosters and load interfaces.

Control	Phase Adaptive Power Modules: PHPM-PA-120-WH; PHPM-PA-DV-WH	3-wire Fluorescent Power Modules: PHPM-3F-120-WH; PHPM-3F-DV-WH	Switched Power Module: PHPM-SW-DV-WH	0–10 V⎓ Interface and Switching Module: GRX-TVI
STCL-153M				
ST-PRO-N	✓	✓		✓
ST-6ANS			✓	

Job Name:	Model Numbers:
Job Number:	

Operation

LED+ Dimmer

Dimming from LED+ dimmer only

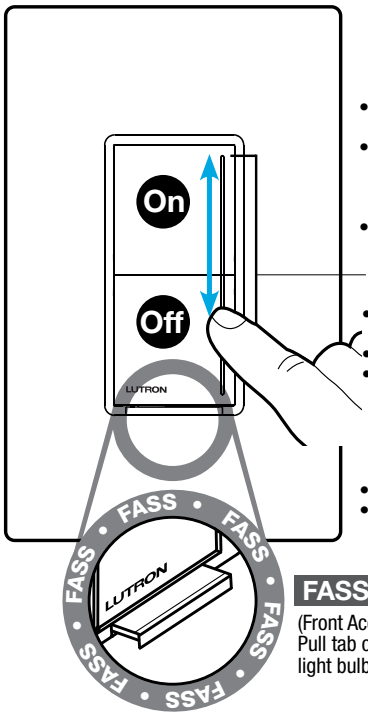

On
- Lights go to full brightness or programmed preset level
- See Sunnata Dimmer MyLevel Personalization Application Note #734 (P/N 048734) at www.lutron.com/SunnataMyLevel to change this behavior
- Anytime - Double tap to full brightness

Adjust:
(Light Bar)
- Touch the light bar to set the lamps to desired level
- Slide to adjust the light level
- Will not turn lights off

Off
- Lights go off
- Press and Hold for more than 1 second - Delayed long fade to off (30 second delay)

FASS*

(Front Accesible Service Switch)
Pull tab out to change the room's light bulb.

Accessory Switch

ON/OFF only from accessory switches

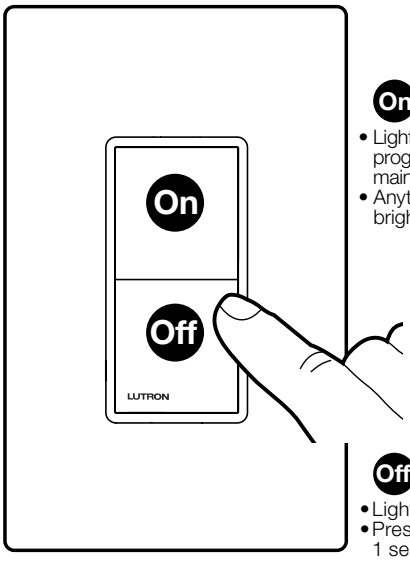

On
- Lights go to full brightness or programmed preset level of the main dimmer
- Anytime - Double tap to full brightness

Off
- Lights go off
- Press and Hold for more than 1 second - Delayed long fade to off (30 second delay)

PRO Dimmer and Companion Dimmer

Dimming from PRO dimmer and all companion dimmer locations

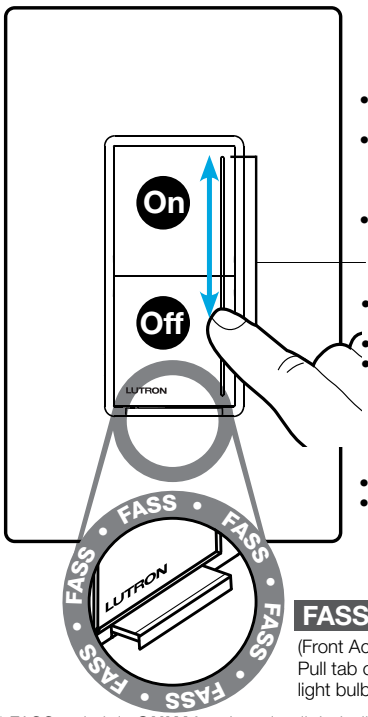

On
- Lights go to full brightness or programmed preset level
- See Sunnata Dimmer MyLevel Personalization Application Note #734 (P/N 048734) at www.lutron.com/SunnataMyLevel to change this behavior
- Anytime - Double tap to full brightness

Adjust:
(Light Bar)
- Touch the light bar to set the lamps to desired level
- Slide to adjust the light level
- Will not turn lights off

Off
- Lights go off
- Press and Hold for more than 1 second - Delayed long fade to off (30 second delay)

FASS*

(Front Accesible Service Switch)
Pull tab out to change the room's light bulb.

Switch and Companion Switch

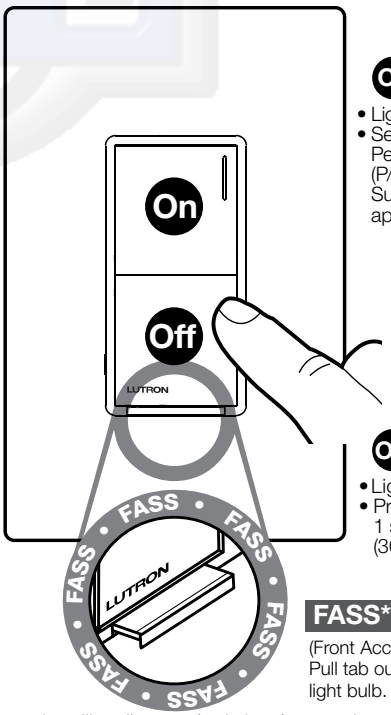

On
- Lights or load turns on
- See Sunnata Switch MyLevel Personalization Application Note #793 (P/N 048793) at www.lutron.com/SunnataMyLevel to change the appearance of the light bar

Off
- Lights or load turns off
- Press and Hold for more than 1 second - Delayed off (30 second delay)

FASS*

(Front Accesible Service Switch)
Pull tab out to change the room's light bulb.

* FASS switch is **ONLY** for changing light bulbs in permanently wired fixtures. Changing wiring or installing dimmers/switches/companion controls requires turning off the breaker at the breaker panel.

Job Name:	Model Numbers:
Job Number:	

Operation (continued)

Fan Control

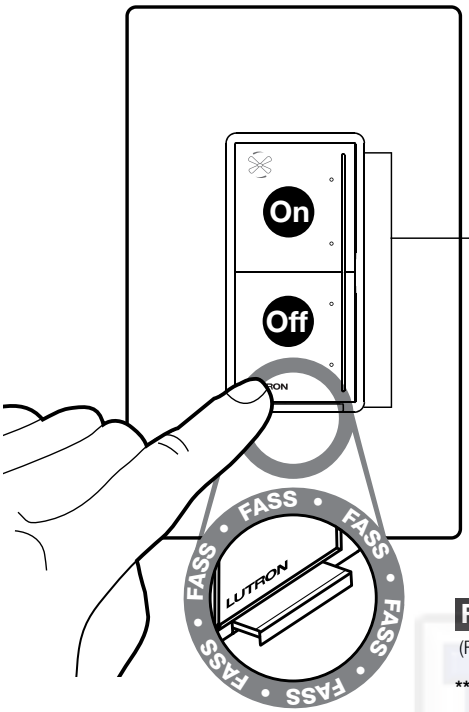

On

- Default – Fan goes to previous fan speed
- See Sunnata Advanced Feature Mode Application Note #734 (P/N 048734) at www.lutron.com/SunnataMyLevel to change this behavior
- Anytime – Double tap to maximum speed

Adjust:
(Light Bar)

- Touch light bar to set fan to any one of the 4 speeds (High, Medium-High, Medium and Low)

Off

- Fan turns off

FASS**

(Front Accesible Service Switch)

****To service or clean the fan, remove power by pulling out the FASS as far as possible. To restore power after servicing the load, push the FASS back in completely.

Job Name:	Model Numbers:
Job Number:	

MyLevel Personalization Advanced Features

Sunnata dimmers, switches and fan controls contain advanced features that allow users to customize the control to meet their specific needs. For a detailed description of the features and uses, please refer to the Sunnata Dimmer and Fan Control MyLevel Personalization Application Note #734 (P/N 048734) or Sunnata Switch MyLevel Personalization Application Note #793 (P/N 048793) at www.lutron.com/SunnataMyLevel. Before entering MyLevel, it is important to have a good understanding of the features.

Available Dimmer MyLevel Personalization Advanced Features	
Feature	**Description**
High-end trim	Select the maximum available light limit. Default - Highest level of trim range.
Low-end trim	Select the minimum available light limit. Default - Middle level of trim range.
Preset light level	Change the behavior of the control when the ON button is pressed from the OFF state to ON. Default - Tapping the ON button always sets the lights to full (locked preset at high-end).
Light bar brightness	Select between high, medium, and low brightness of the control's light bar. Default - Medium brightness.
Light level indicator/locator light*	Select between ON and OFF for the light bar when the lights are on (light level indicator) and when the lights are off (locator light). Default - ON/ON.
Phase select (PRO-N only)	Select the Phase mode in which the dimmer operates. Forward or Reverse (Default).
Restore factory default settings	Select to return dimmer to its original factory settings.

* The dimmer light bar will always illuminate when interacting with the dimmer to indicate the light level setting.

Available Switch MyLevel Personalization Advanced Features	
Feature	**Description**
Light bar brightness	Select between high, medium, and low brightness of the control's light bar. Default - Medium brightness.
Light level indicator/locator light	Select between ON and OFF for the light bar when the lights are on (light level indicator) and when the lights are off (locator light). Default - ON/ON.

Available Fan Control MyLevel Personalization Advanced Features	
Feature	**Description**
Preset fan speed	Change the behavior of the control when the ON button is pressed from the OFF state to ON. Default - Tapping the ON button sets the fan to its previous speed.
Light bar brightness	Select between high, medium, and low brightness of the control's light bar. Default - Medium brightness.
Fan speed indicator/locator light	Select between ON and OFF for the light bar when the fan is on (fan speed indicator) and when the fan is off (locator light). Default - ON/ON.

Job Name:	Model Numbers:
Job Number:	

Wiring Diagrams

Single Pole Wiring: STCL-153M

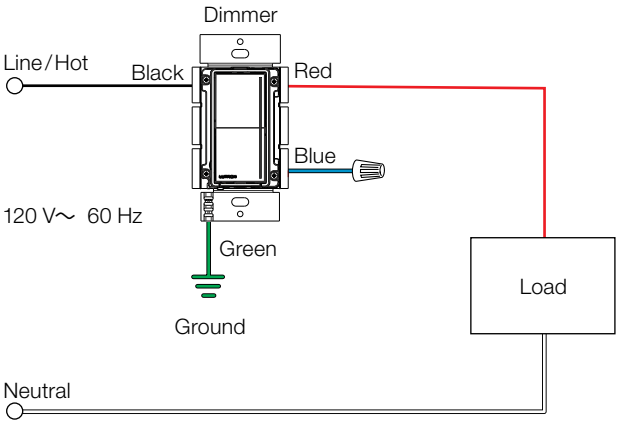

Single Pole Application:

- Black and red wires are interchangeable in this application.
- Cap the blue wire with the supplied wire connector.
- Do not connect the blue wire to any other wiring or to ground.

3-Way Wiring (Using 3-Way Mechanical Switch): STCL-153M

Dimmer Line Side

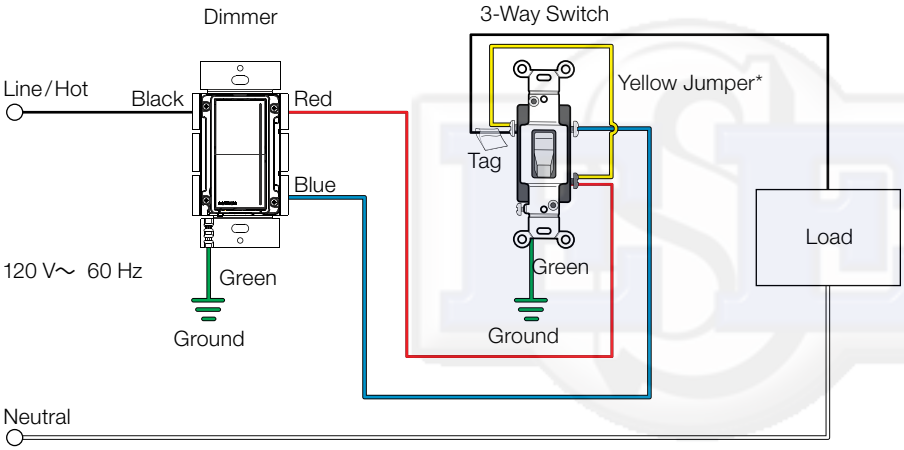

Dimmer Load Side

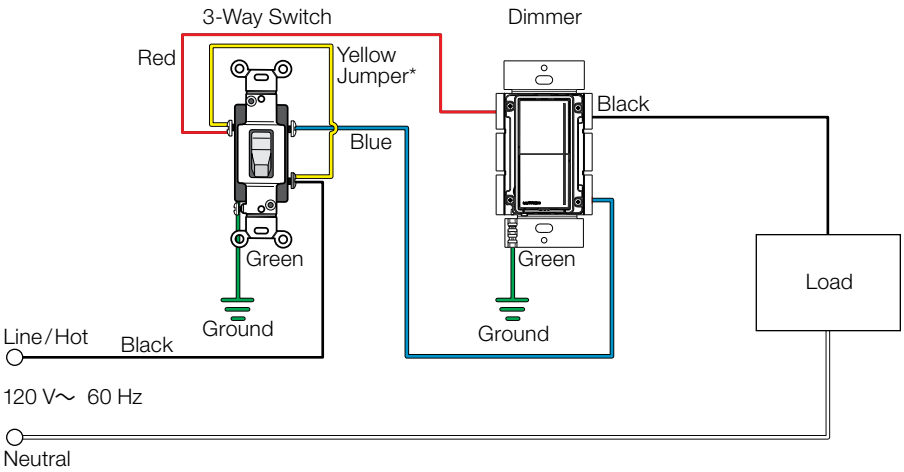

* Yellow jumper wire is included in the dimmer packaging.

Job Name:	Model Numbers:
Job Number:	

Wiring Diagrams (continued)

Wiring (Using Sunnata Accessory Switch[1]): STCL-153M with ST-AS

Dimmer Line Side

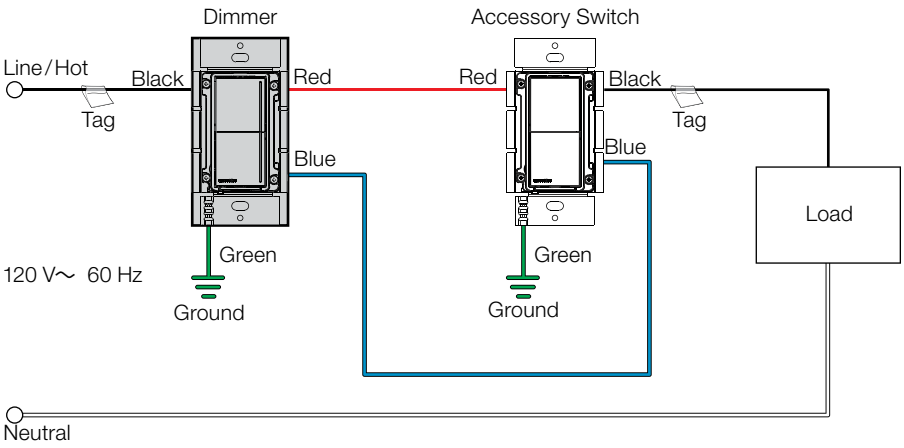

Note: ST-AS is NOT compatible with STCL-153P, it works only with STCL-153M.

Dimmer Load Side

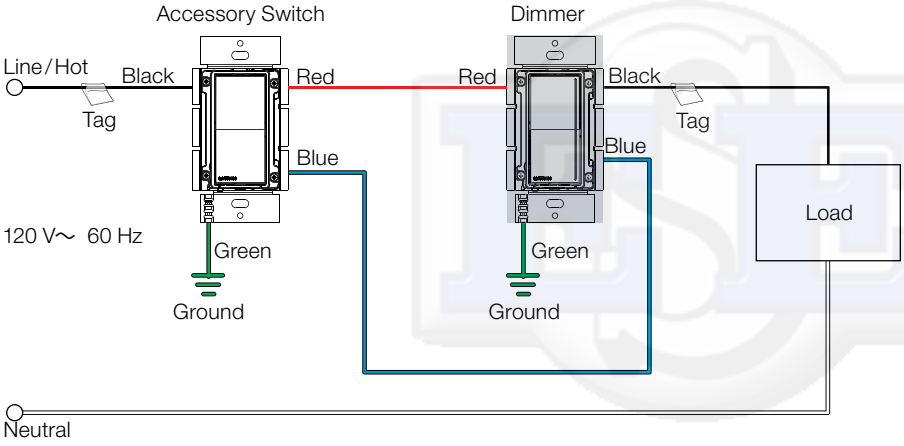

Wiring Diagrams (continued)

4-Way Wiring (Using Sunnata Accessory Switch(es)[1,2]): STCL-153M with ST-AS

Dimmer Line Side

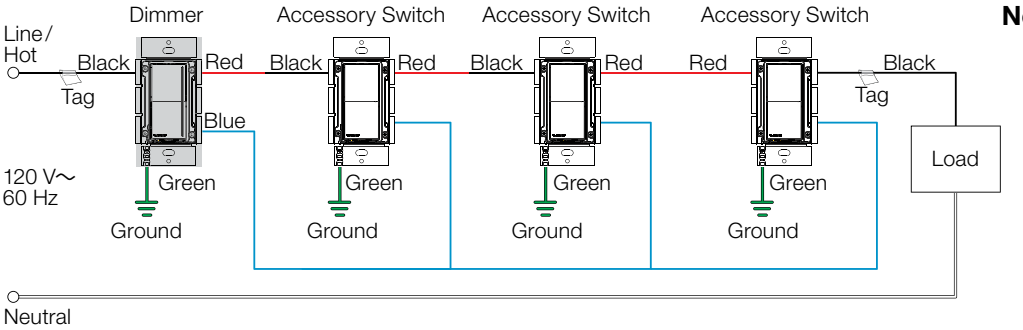

Note: ST-AS is NOT compatible with STCL-153P, it works only with STCL-153M.

Dimmer Load Side

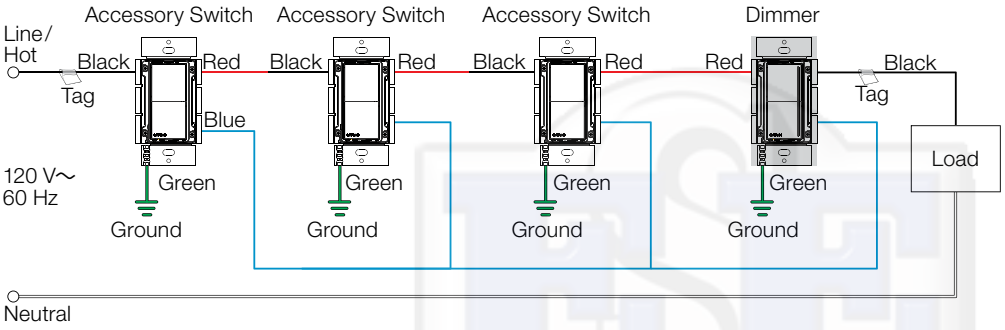

Dimmer in the Middle

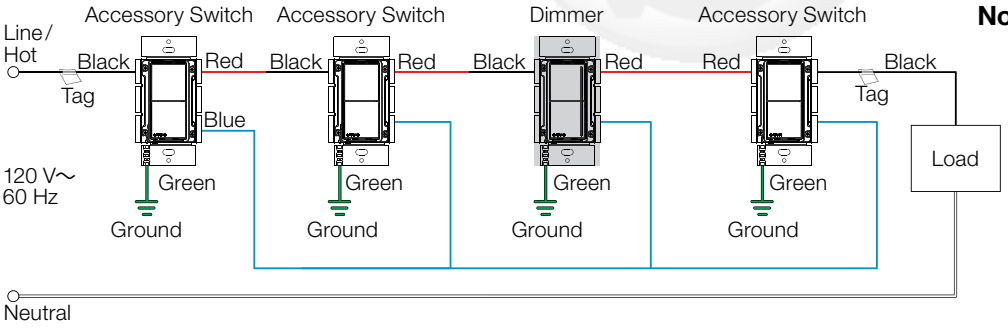

Note: Main dimmer can go in any location.

1 ST-AS, Sunnata accessory switch is NOT compatible with STCL-153P, it works only with STCL-153M.
2 Up to nine (9) accessory switches may be connected to the dimmer. Total blue wire connection wire length may be up to 150 ft (45 m).

Job Name:	Model Numbers:
Job Number:	

Wiring Diagrams (continued)

Single-Location Installation[1] with required Neutral: -PRO-N, -6ANS

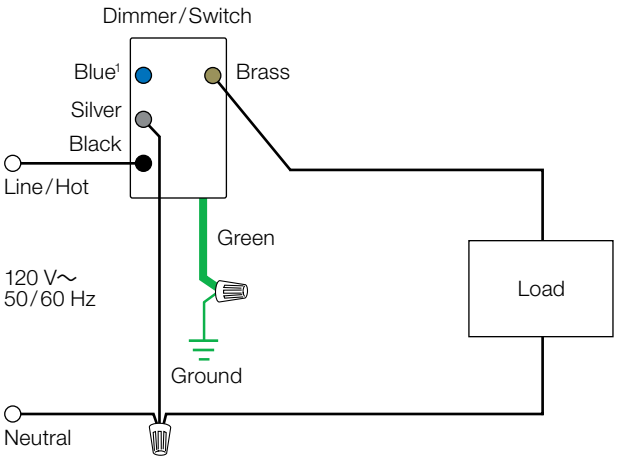

Note: Ground connection is a 18 AWG (1.0 mm²) green wire.

[1] When using controls in single-location installations, tighten the blue terminal. Do not connect the blue terminal to any other wiring or to ground.

Single Pole Installation (load is controlled from 1 location): ST-FSQ-N

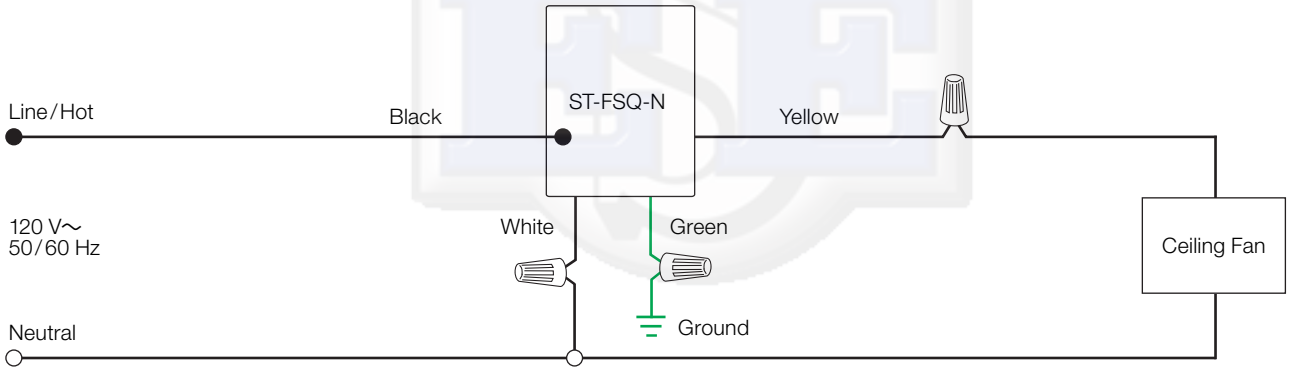

Job Name:	Model Numbers:
Job Number:	

Multi-Location Installation with required Neutral: -PRO-N with -RD OR -8ANS OR -6ANS with -RS

Note: Dimmer and switch must be on the load side

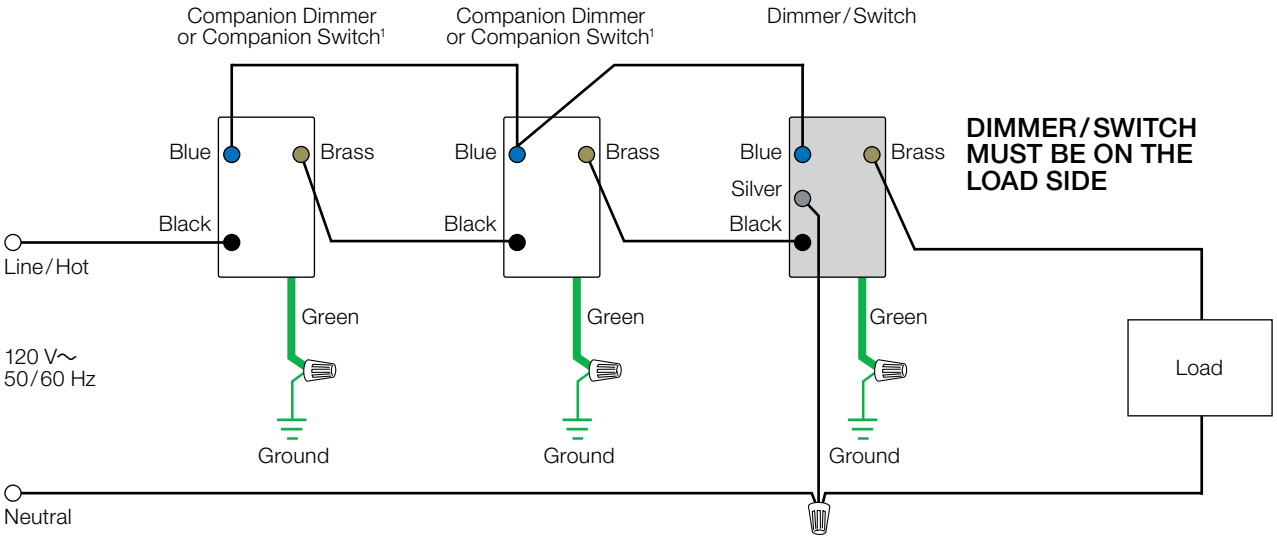

Note: Ground connection is a 18 AWG (1.0 mm^2) green wire.

[1] Up to four companion dimmers/companion switches may be connected to the dimmer/switch. Total blue terminal wire length may be up to 150 ft (45 m).

Job Name:	Model Numbers:
Job Number:	

Colors and Finishes

Gloss - All models

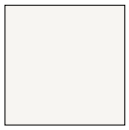
White
WH

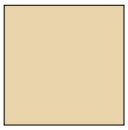
Ivory
IV

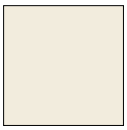
Light Almond
LA


Black
BL

Satin Finishes - PRO, Switch and Fan models only

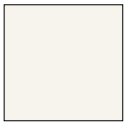
Brilliant White
BW

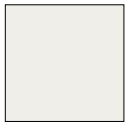
Glacier White
GL

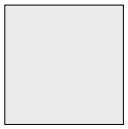
Snow
SW

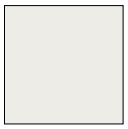
Architectural White
RW

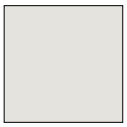
Lunar Gray
LG

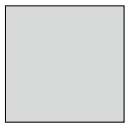
Mist
MI

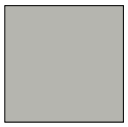
Pebble
PB


Cobblestone
CS


Slate
SL


Midnight
MN

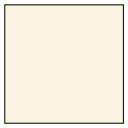
Biscuit
BI

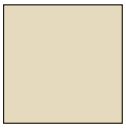
Sand
SD


Taupe
TP


Pumice
PM

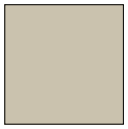
Clay
CY

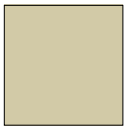
Sage
SA


Espresso
EP


Truffle
TF


Deep Sea
DE


Signal Red
SR

- Due to printing limitations, colors and finishes shown cannot be guaranteed to perfectly match actual product colors.
- Color chip keychains are available for more precise color matching:
  Gloss Finishes: DG-CK-1
  Satin Finishes: SF-CK-1
  For coordinating wallplates and accessories, visit lutron.com/claro

The Lutron logo, Lutron, Claro, FASS, LED+, Hi-lume, MyLevel, and Sunnata are trademarks or registered trademarks of Lutron Electronics Co., Inc. in the US and/or other countries. All other product names, logos, and brands are property of their respective owners.

Job Name:	Model Numbers:
Job Number:	