Copper Split Bolts - N-1/0

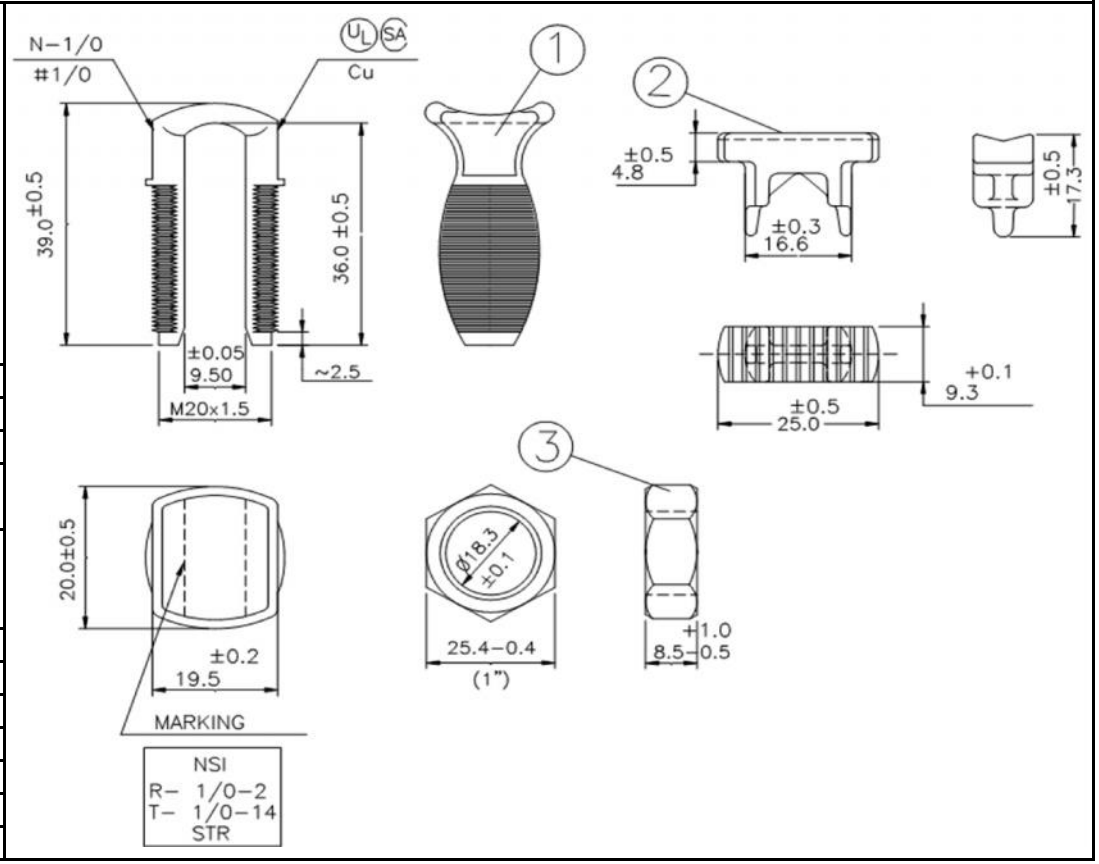

Drawn - SD		
Approved - KM		
Material - Copper		
Title - Copper Split Bolts		
Max Run To Max Tap		1/0 - 1/0 STR
Min Run To Min Tap		2 - 14 STR
Max Run To Min Tap		1/0 - 14 STR
Min Equal Run-Tap		4 - 4 STR
3	Nut	Bronze
2	Rider	Bronze
1	Body	Electrolytical Copper