PASS & SEYMOUR®

Hard Use Switches
15 & 20A, 120/277VAC

Affordable durability for a wide range of applications.

CSB15AC1, CSB15AC2, CSB15AC3, CSB15AC4, CSB20AC1, CSB20AC2, CSB20AC3, CSB20AC4

These switches offer excellent value while meeting federal specification standards. External screw-pressure-plate back wiring enables fast installation and superior electrical connections. Rugged construction shrugs off hard use and abuse.

Features & Benefits

One-piece plated steel strap for corrosion resistance

Heavy-duty bumpers for quiet, smooth operation

Oversized silver-alloy contacts for long life and better heat dissipation

Heavy-duty, brass alloy, one-piece contact arm virtually eliminates contact bounce

Shallow design for easier installation

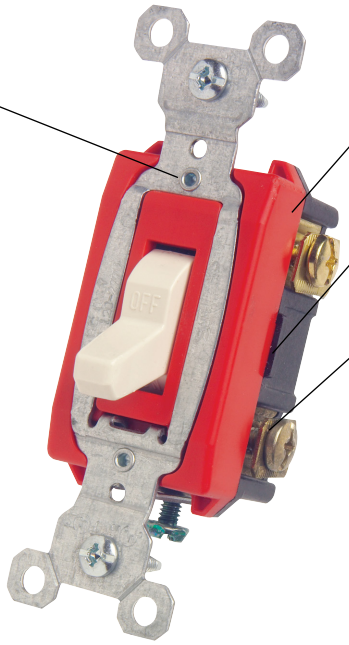

Glass-reinforced nylon back body for durability and strength

Locking support provides resistance to face and back body separation

Side and external screw-pressure-plate back wire with #14 – #10 AWG copper or copper-clad wire

Cam control and spring actuator for positive "makes and breaks" with a minimum of arcing

CSB20AC1LA

3rd Party Compliance

UL Listed, File Number E140597, Standard UL20, General Use Snap Switches. Federal Specification WS896. cULus Listed, File Number LR17446, Standard CSA-C22.2 No. 111, General Use Snap Switches. Conforms to NEMA WD-1 and WD-6.

Technical Information

Performance	
Electrical	
Dielectric Withstand Voltage	1500V Minimum
Maximum Working Voltage	277VAC
Overload	Minimum 4.8 times rated current for 100 cycles
Temperature Rise	30°C maximum at rated current
Maximum Continuous Current	277VAC
Endurance	50,000 cycles minimum, resistive, inductive, tungsten filament lamp load (Fed Spec)
Mechanical	
Terminal Accommodations	#14 AWG – #10 AWG
Environmental	
Flammability	UL94 V2
Operating Temperature	Maximum continuous +115°C, minimum -40°C

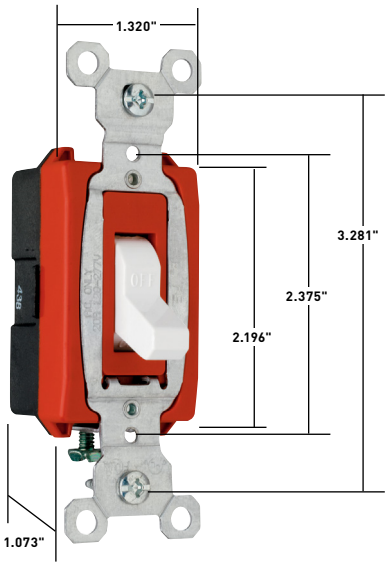

Dimensions for 15 & 20 Amp

Materials	
Back Body	Glass-Reinforced Nylon
Front Body	Nylon
Toggle	Thermoplastic Polycarbonate
Terminals	Brass
Terminal Screws	Tri-Drive Brass-Plated Steel
Strap	Plated Steel
Pressure Plate	Brass
Contacts	Silver Cadmium Oxide
Spring Arm	Brass
Bumper	Rubber
Spring	Zinc-Plated Steel
Ground Terminal	Brass
Ground Screw	Tri-Drive Zinc-Plated Steel

HP Conversion Table – Switches	
15 Amp	1/2 Horsepower at 120VAC; 2 Horsepower at 240VAC
20 Amp	1 Horsepower at 120VAC; 2 Horsepower at 240VAC

15 Amp Cover	Blue
20 Amp Cover	Red

Warranty
1 Year

Ordering Information

Hard Use Switches

Catalog Number				Rating		
Single Pole	**Double Pole**	**Three-Way**	**Four-Way**	**A**	**VAC**	**Color**
CSB15AC1I	**CSB15AC2I**	**CSB15AC3I**	**CSB15AC4I**	15	120/277	Ivory
CSB15AC1W	**CSB15AC2W**	**CSB15AC3W**	**CSB15AC4W**	15	120/277	White
CSB15AC1	**CSB15AC2**	**CSB15AC3**	**CSB15AC4**	15	120/277	Brown
CSB15AC1GRY	**CSB15AC2GRY**	**CSB15AC3GRY**	**CSB15AC4GRY**	15	120/277	Gray
CSB15AC1LA	**CSB15AC2LA**	**CSB15AC3LA**	**CSB15AC4LA**	15	120/277	Light Almond
CSB20AC1I	**CSB20AC2I**	**CSB20AC3I**	**CSB20AC4I**	20	120/277	Ivory
CSB20AC1W	**CSB20AC2W**	**CSB20AC3W**	**CSB20AC4W**	20	120/277	White
CSB20AC1	**CSB20AC2**	**CSB20AC3**	**CSB20AC4**	20	120/277	Brown
CSB20AC1GRY	**CSB20AC2GRY**	**CSB20AC3GRY**	**CSB20AC4GRY**	20	120/277	Gray
CSB20AC1BK		**CSB20AC3BK**		20	120/277	Black
CSB20AC1LA	**CSB20AC2LA**	**CSB20AC3LA**	**CSB20AC4LA**	20	120/277	Light Almond

Vertical Markets

- **Education**
- **Institutional**
- **Hospitality/Lodging**
- **Retail**
- **Multiple Dwelling**
- **Office**

Also available

- **Plug Load Control Devices**
- **Hospital Grade Devices**
- **PlugTail® Devices**
- **Plug Load Solutions**
- **SPD & Isolated Ground Devices**
- **Ground Continuity Monitoring Devices (GCM)**
- **Straight Blade Plugs & Connectors**
- **Turnlok® Locking Devices**
- **IEC 309 Industrial Products**
- **Flexcor® Wire Mesh Grip**
- **USB Charging Devices**

The paper used to print this document is an environmentally responsible paper with 10% post consumer waste, with FSC and SFI Chain of Custody certifications, Lacey Act complaint. 100% of the electricity used to manufacture Flo sheets is generated with Green-e certified renewable energy.

All brand and product names referenced in this document are registered trademarks or trademarks of their respective holders.

Legrand, North America
60 Woodlawn Street
West Hartford, CT 06110
1.877.BY.LEGRAND (295.3472)
www.legrand.us

905.738.9195
www.legrand.ca

FOLLOW US

 ©2018 Legrand All Rights Reserved

PASS & SEYMOUR®

Hard Use Switches
15 & 20A, 120/277VAC

Affordable durability for a wide range of applications.

CSB15AC1, CSB15AC2, CSB15AC3, CSB15AC4, CSB20AC1, CSB20AC2, CSB20AC3, CSB20AC4

These switches offer excellent value while meeting federal specification standards. External screw-pressure-plate back wiring enables fast installation and superior electrical connections. Rugged construction shrugs off hard use and abuse.

Features & Benefits

One-piece plated steel strap for corrosion resistance

Heavy-duty bumpers for quiet, smooth operation

Oversized silver-alloy contacts for long life and better heat dissipation

Heavy-duty, brass alloy, one-piece contact arm virtually eliminates contact bounce

Shallow design for easier installation

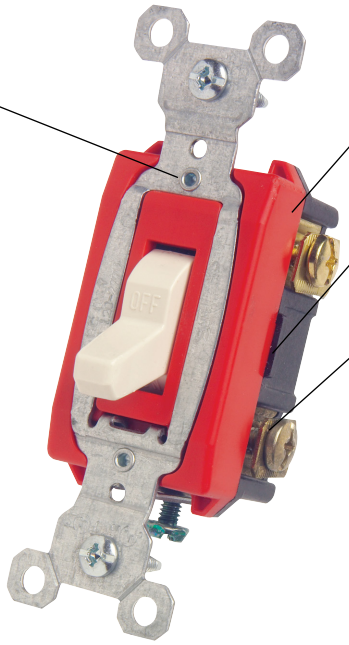

Glass-reinforced nylon back body for durability and strength

Locking support provides resistance to face and back body separation

Side and external screw-pressure-plate back wire with #14 – #10 AWG copper or copper-clad wire

Cam control and spring actuator for positive "makes and breaks" with a minimum of arcing

CSB20AC1LA

3rd Party Compliance

UL Listed, File Number E140597, Standard UL20, General Use Snap Switches. Federal Specification WS896. cULus Listed, File Number LR17446, Standard CSA-C22.2 No. 111, General Use Snap Switches. Conforms to NEMA WD-1 and WD-6.

Technical Information

Performance	
Electrical	
Dielectric Withstand Voltage	1500V Minimum
Maximum Working Voltage	277VAC
Overload	Minimum 4.8 times rated current for 100 cycles
Temperature Rise	30°C maximum at rated current
Maximum Continuous Current	277VAC
Endurance	50,000 cycles minimum, resistive, inductive, tungsten filament lamp load (Fed Spec)
Mechanical	
Terminal Accommodations	#14 AWG – #10 AWG
Environmental	
Flammability	UL94 V2
Operating Temperature	Maximum continuous +115°C, minimum -40°C

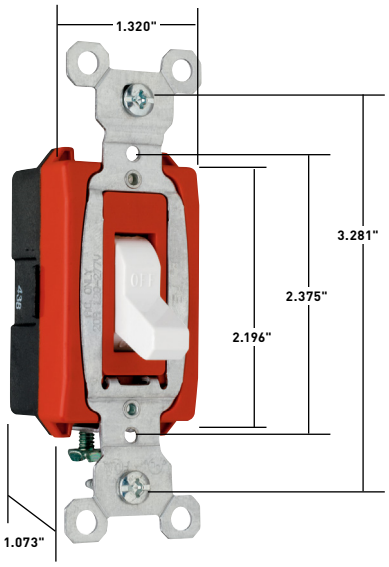

Dimensions for 15 & 20 Amp

Materials	
Back Body	Glass-Reinforced Nylon
Front Body	Nylon
Toggle	Thermoplastic Polycarbonate
Terminals	Brass
Terminal Screws	Tri-Drive Brass-Plated Steel
Strap	Plated Steel
Pressure Plate	Brass
Contacts	Silver Cadmium Oxide
Spring Arm	Brass
Bumper	Rubber
Spring	Zinc-Plated Steel
Ground Terminal	Brass
Ground Screw	Tri-Drive Zinc-Plated Steel

HP Conversion Table – Switches	
15 Amp	1/2 Horsepower at 120VAC; 2 Horsepower at 240VAC
20 Amp	1 Horsepower at 120VAC; 2 Horsepower at 240VAC

15 Amp Cover	Blue
20 Amp Cover	Red

Warranty
1 Year

Ordering Information

Hard Use Switches

Catalog Number				Rating		
Single Pole	**Double Pole**	**Three-Way**	**Four-Way**	**A**	**VAC**	**Color**
CSB15AC1I	**CSB15AC2I**	**CSB15AC3I**	**CSB15AC4I**	15	120/277	Ivory
CSB15AC1W	**CSB15AC2W**	**CSB15AC3W**	**CSB15AC4W**	15	120/277	White
CSB15AC1	**CSB15AC2**	**CSB15AC3**	**CSB15AC4**	15	120/277	Brown
CSB15AC1GRY	**CSB15AC2GRY**	**CSB15AC3GRY**	**CSB15AC4GRY**	15	120/277	Gray
CSB15AC1LA	**CSB15AC2LA**	**CSB15AC3LA**	**CSB15AC4LA**	15	120/277	Light Almond
CSB20AC1I	**CSB20AC2I**	**CSB20AC3I**	**CSB20AC4I**	20	120/277	Ivory
CSB20AC1W	**CSB20AC2W**	**CSB20AC3W**	**CSB20AC4W**	20	120/277	White
CSB20AC1	**CSB20AC2**	**CSB20AC3**	**CSB20AC4**	20	120/277	Brown
CSB20AC1GRY	**CSB20AC2GRY**	**CSB20AC3GRY**	**CSB20AC4GRY**	20	120/277	Gray
CSB20AC1BK		**CSB20AC3BK**		20	120/277	Black
CSB20AC1LA	**CSB20AC2LA**	**CSB20AC3LA**	**CSB20AC4LA**	20	120/277	Light Almond

Vertical Markets

- **Education**
- **Institutional**
- **Hospitality/Lodging**
- **Retail**
- **Multiple Dwelling**
- **Office**

Also available

- **Plug Load Control Devices**
- **Hospital Grade Devices**
- **PlugTail® Devices**
- **Plug Load Solutions**
- **SPD & Isolated Ground Devices**
- **Ground Continuity Monitoring Devices (GCM)**
- **Straight Blade Plugs & Connectors**
- **Turnlok® Locking Devices**
- **IEC 309 Industrial Products**
- **Flexcor® Wire Mesh Grip**
- **USB Charging Devices**

The paper used to print this document is an environmentally responsible paper with 10% post consumer waste, with FSC and SFI Chain of Custody certifications, Lacey Act complaint. 100% of the electricity used to manufacture Flo sheets is generated with Green-e certified renewable energy.

All brand and product names referenced in this document are registered trademarks or trademarks of their respective holders.

Legrand, North America
60 Woodlawn Street
West Hartford, CT 06110
1.877.BY.LEGRAND (295.3472)
www.legrand.us

905.738.9195
www.legrand.ca

FOLLOW US

 ©2018 Legrand All Rights Reserved